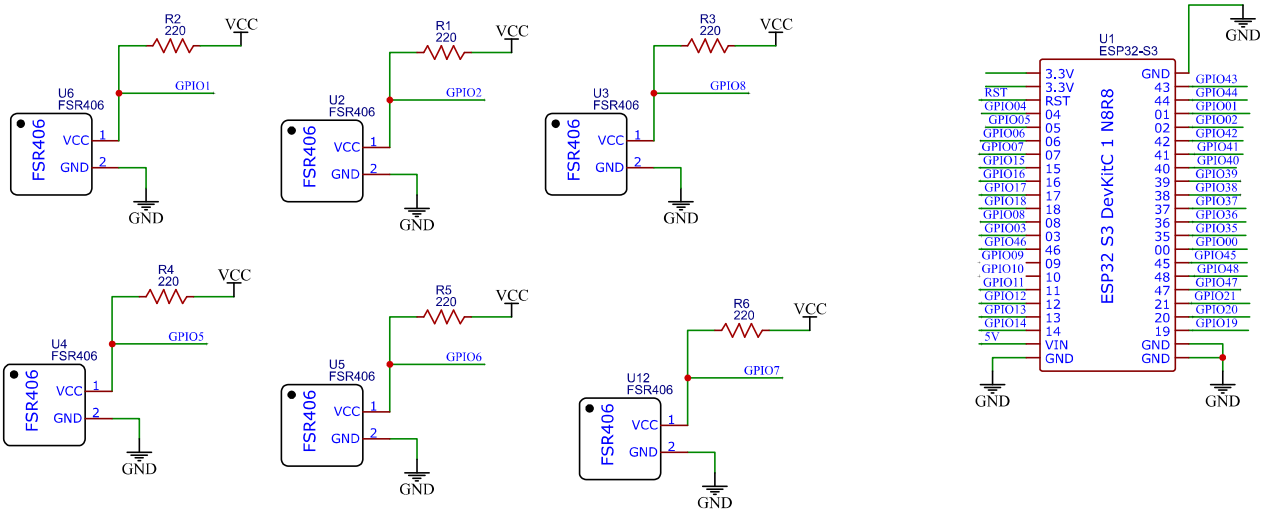

TITLE: Sheet_1		REV: 1.0
EasyEDA	Company: Your Company	Sheet: 1/1
	Date: 2026-02-20 Drawn By: saruttayaruangsaviat	

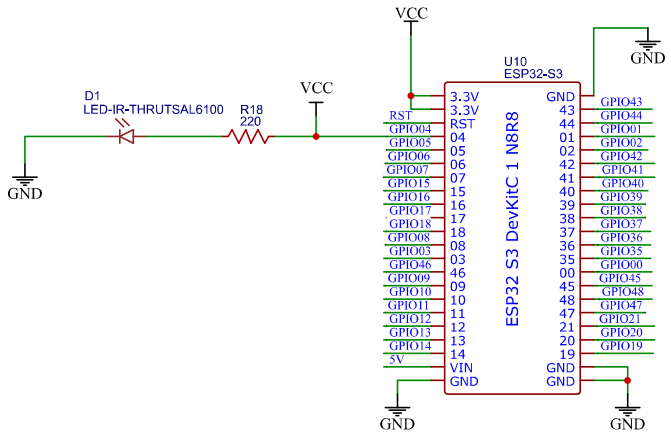

TITLE: Sheet_1		REV: 1.0
EasyEDA	Company: Your Company	Sheet: 1/1
	Date: 2026-02-21 Drawn By: saruttayaruangsaviat	