On Gloves
Flex sensors + MPU6050

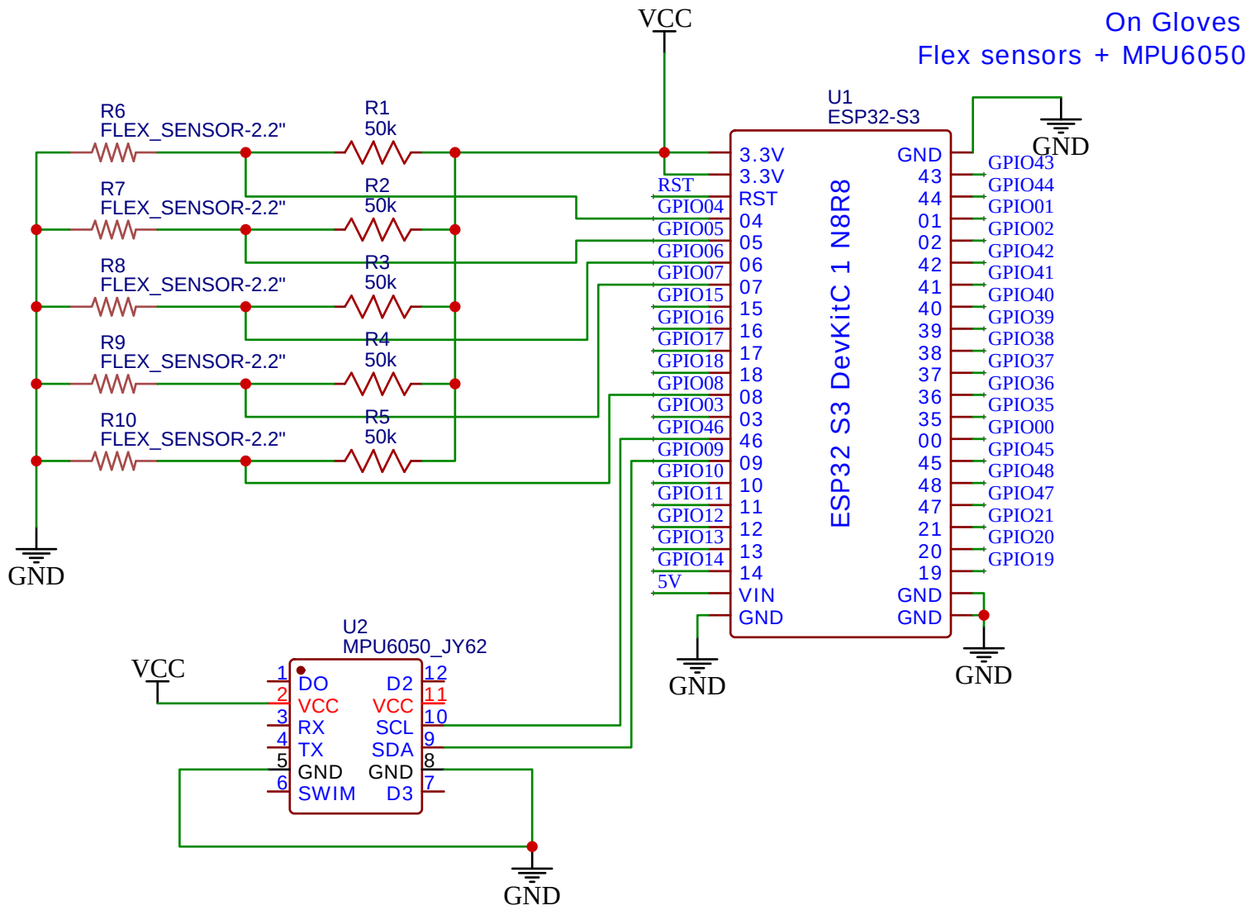

Output Devices
Microphone + Speaker + OLED

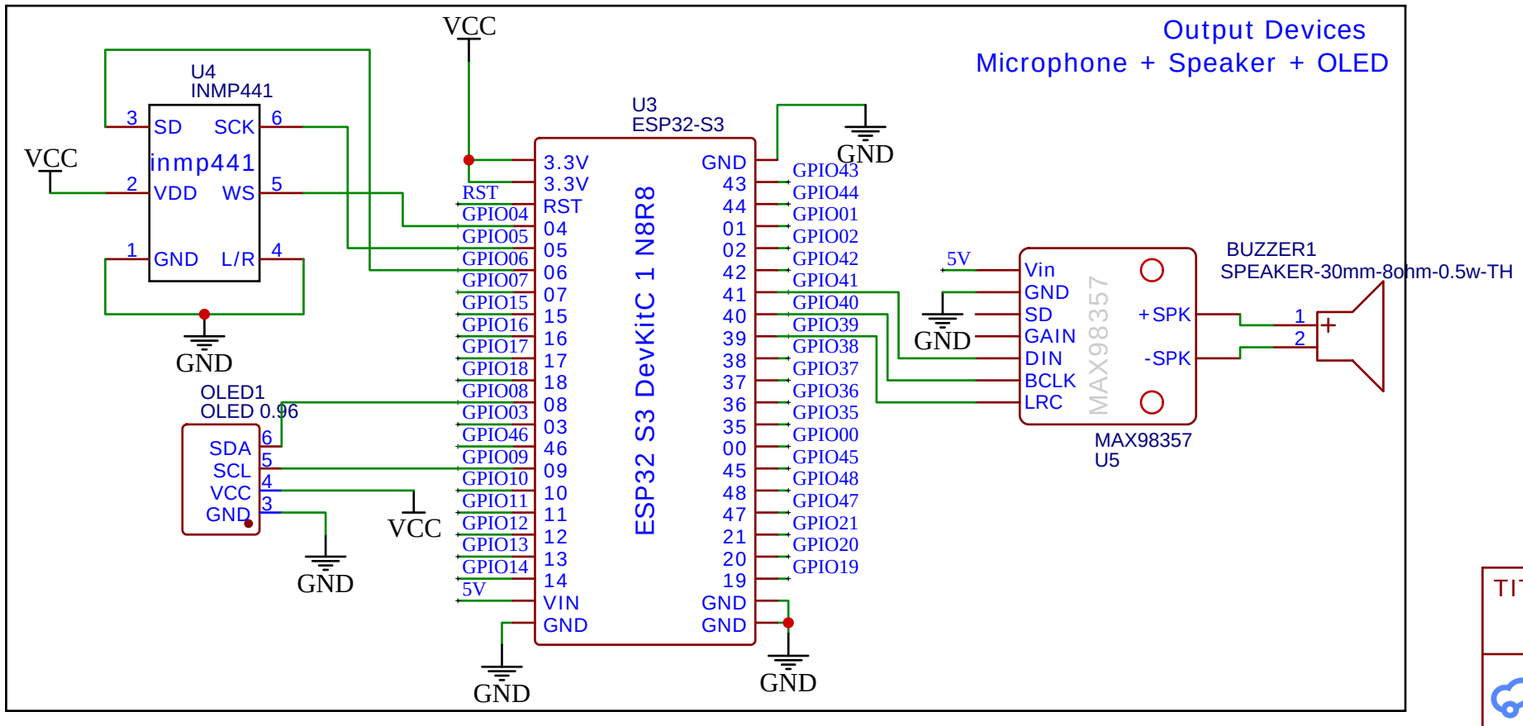

TITLE: SoundArai Schematic		REV: 1.0
EasyEDA	Company: Maituen	Sheet: 1/1
	Date: 2026-03-12 Drawn By: Maituen	