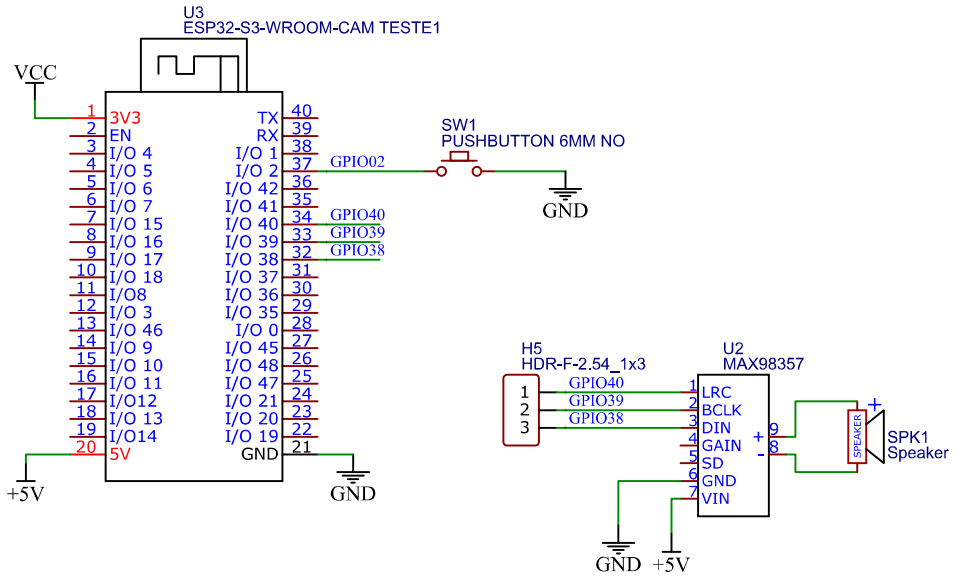

TITLE: Doorbell		REV: 1.0
EasyEDA	Company:	Sheet: 1/2
	Date: 2026-02-20 Drawn By: veerasarut.t	

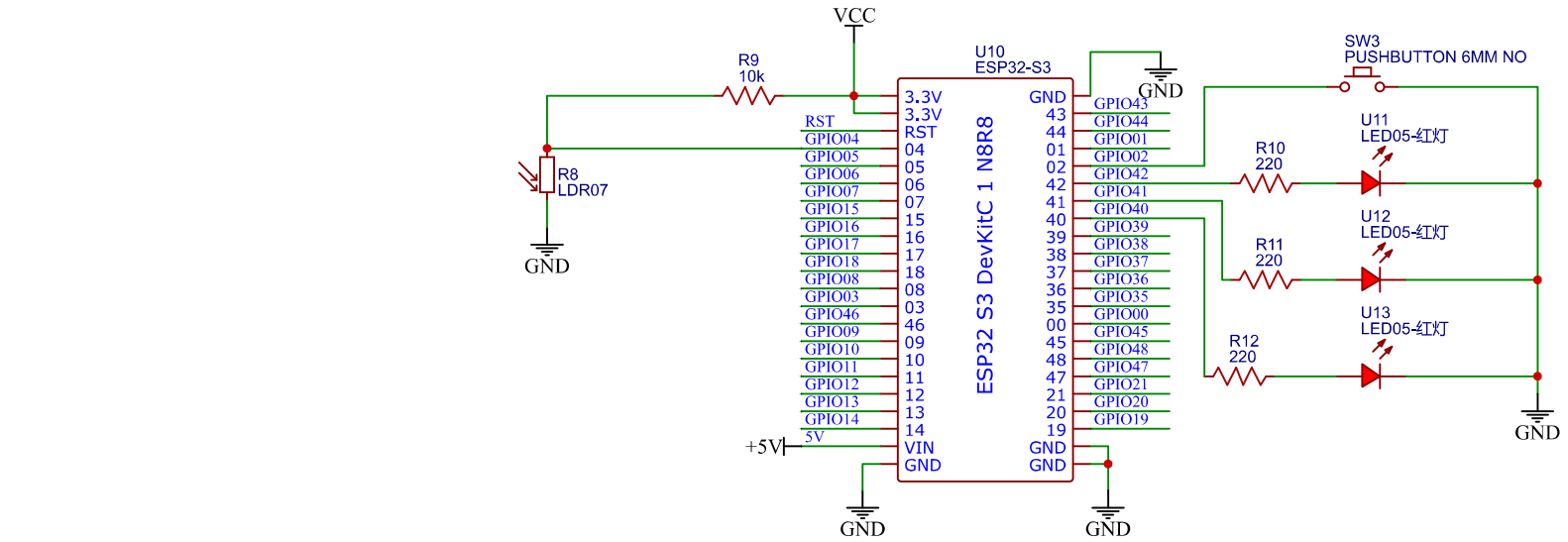

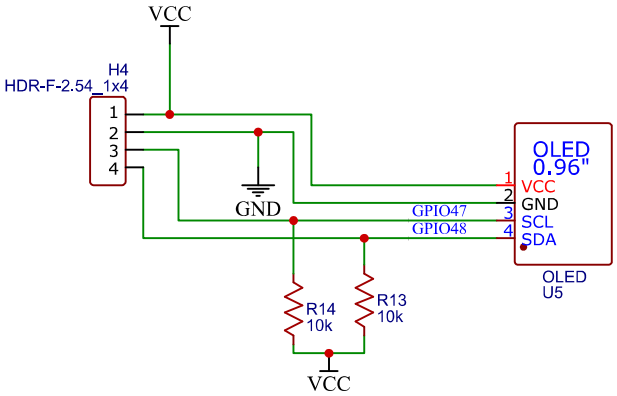

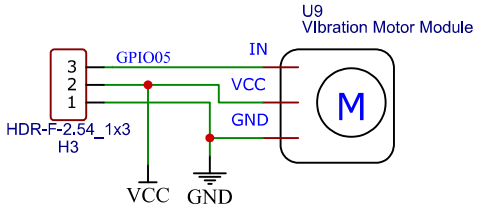

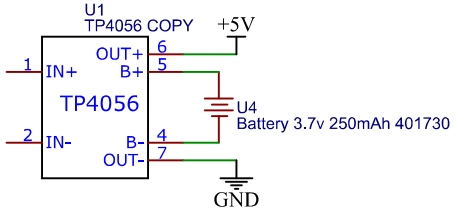

TITLE: Wristband		REV: 1.0
EasyEDA	Company:	Sheet: 2/2
	Date: 2026-02-20 Drawn By: veerasarut.t	