LIPO BATTERY 803450 3.7V 1500MAH

LP103450

V -
V+

2
1

TP4056

1 IN+
3 IN-

2 BAT+
4 BAT-

VCC

GND

ESP32-S3

ESP32 S3 DevKitC 1 N8R8

3.3V	3.3V	GND	GND
3.3V	3.3V	43	GPIO43
RST	RST	44	GPIO44
GPIO4	04	01	GPIO01
GPIO5	05	02	GPIO02
GPIO6	06	42	GPIO42
GPIO7	07	41	GPIO41
GPIO15	15	40	GPIO40
GPIO16	16	39	GPIO39
GPIO17	17	38	GPIO38
GPIO18	18	37	GPIO37
GPIO8	08	36	GPIO36
GPIO3	08	35	GPIO35
GPIO46	03	00	GPIO00
GPIO9	46	45	GPIO45
GPIO10	09	48	GPIO48
GPIO11	10	47	GPIO47
GPIO12	11	21	GPIO21
GPIO13	12	20	GPIO20
GPIO14	13	19	GPIO19
5V	14	GND	
	VIN	GND	
	GND		

GND

GND

GND

GY521-MPU6050

3-Axis Acc
3-Axis Gyro

1 VCC
2 GND
3 SCL
4 SDA
5 XDA
6 XCL
7 ADO
8 INT

GY521-MPU6050

3-Axis Acc
3-Axis Gyro

1 VCC
2 GND
3 SCL
4 SDA
5 XDA
6 XCL
7 ADO
8 INT

VCC

GPIO48

GPIO47

GND

TITLE: mpu6050		REV: 1.0
EasyEDA	Company: Your Company	Sheet: 1/1
	Date: 2025-12-22 Drawn By: nannapas.chi	

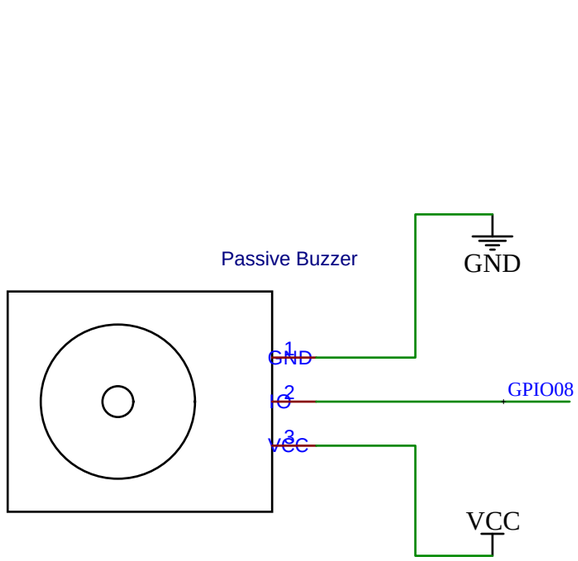

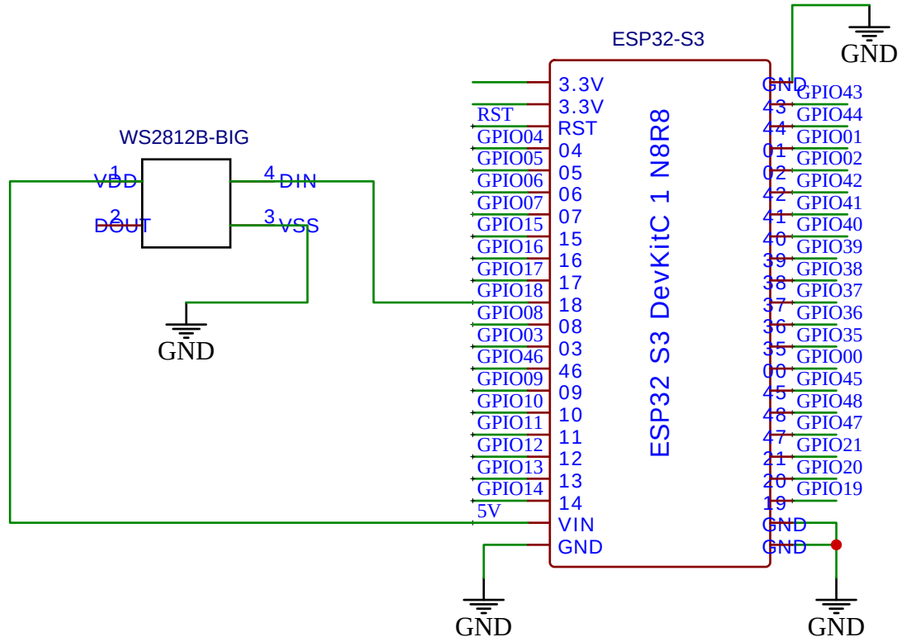

TITLE: led matrix + buzzer		REV: 1.0
EasyEDA	Company: Your Company	Sheet: 1/1
	Date: 2025-12-22 Drawn By: nannapas.chi	