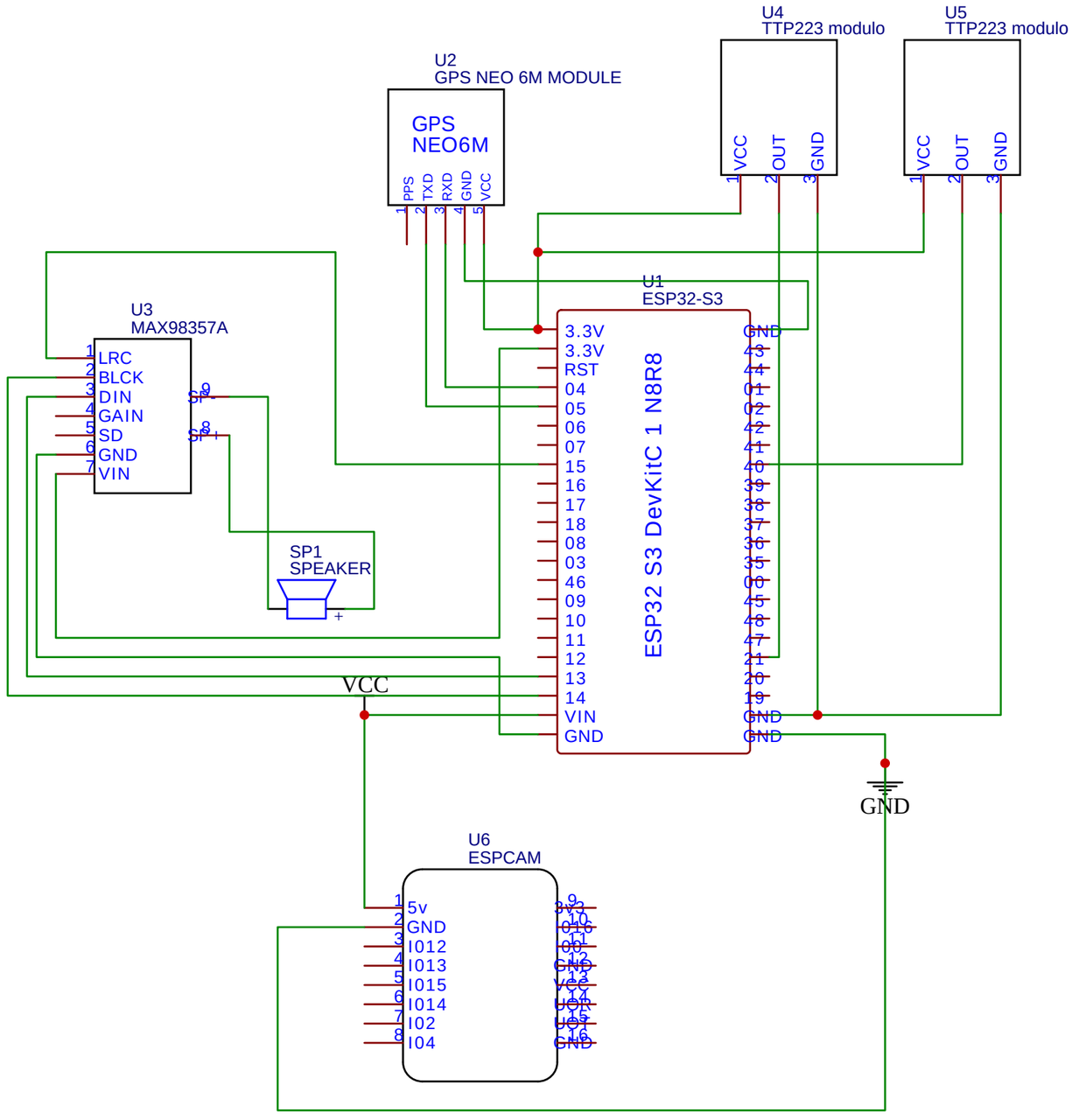

TITLE: schematic hat		REV: 1.0
EasyEDA	Company: Your Company	Sheet: 1/1
	Date: 2026-03-12 Drawn By: pm.theerawit	