Text

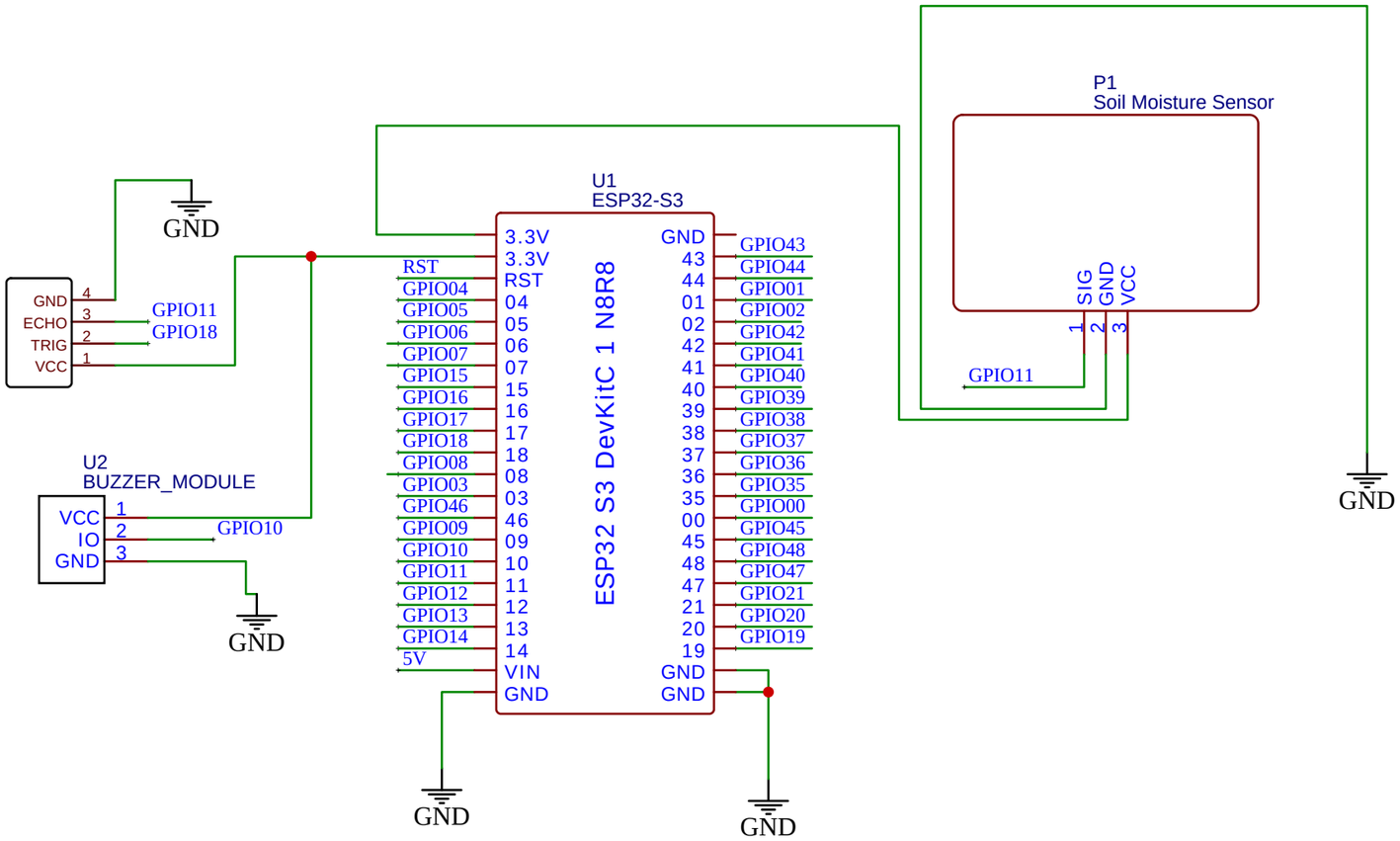

TITLE: 鹐 隥		REV: 1.0
EasyEDA	Company: Your Company	Sheet: 1/1
	Date: 2026-03-11 Drawn By:	