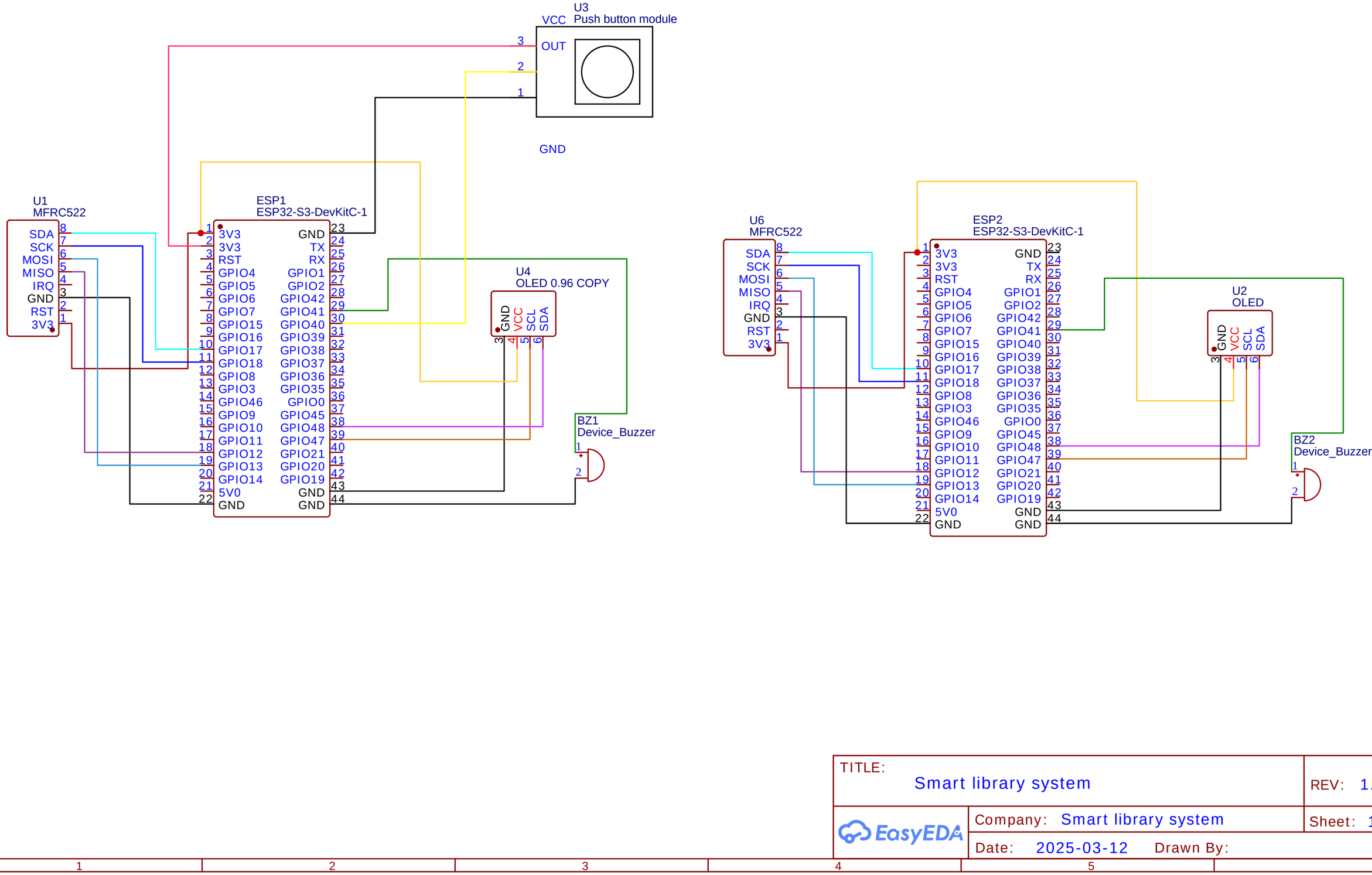

TITLE: Smart library system		REV: 1.0
EasyEDA	Company: Smart library system	Sheet: 1/1
	Date: 2025-03-12 Drawn By:	