ESP32

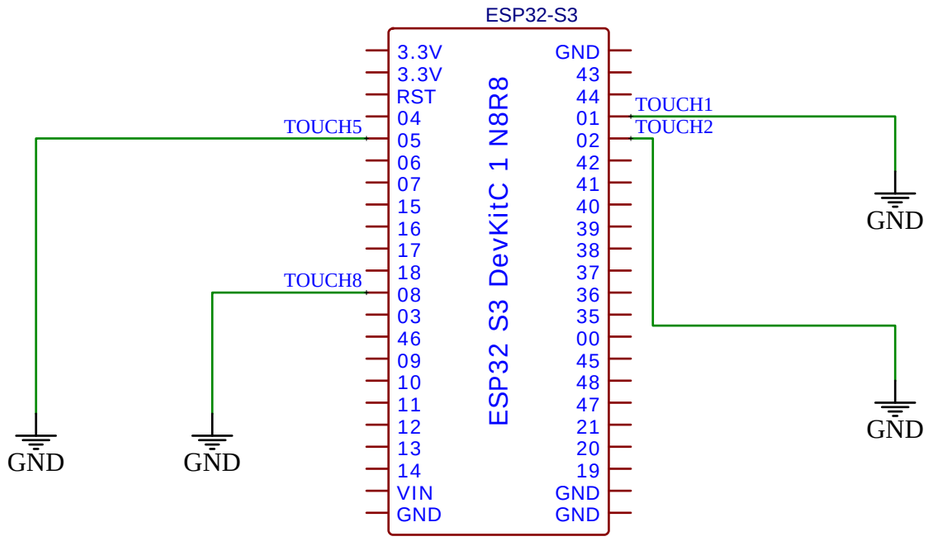

ESP32

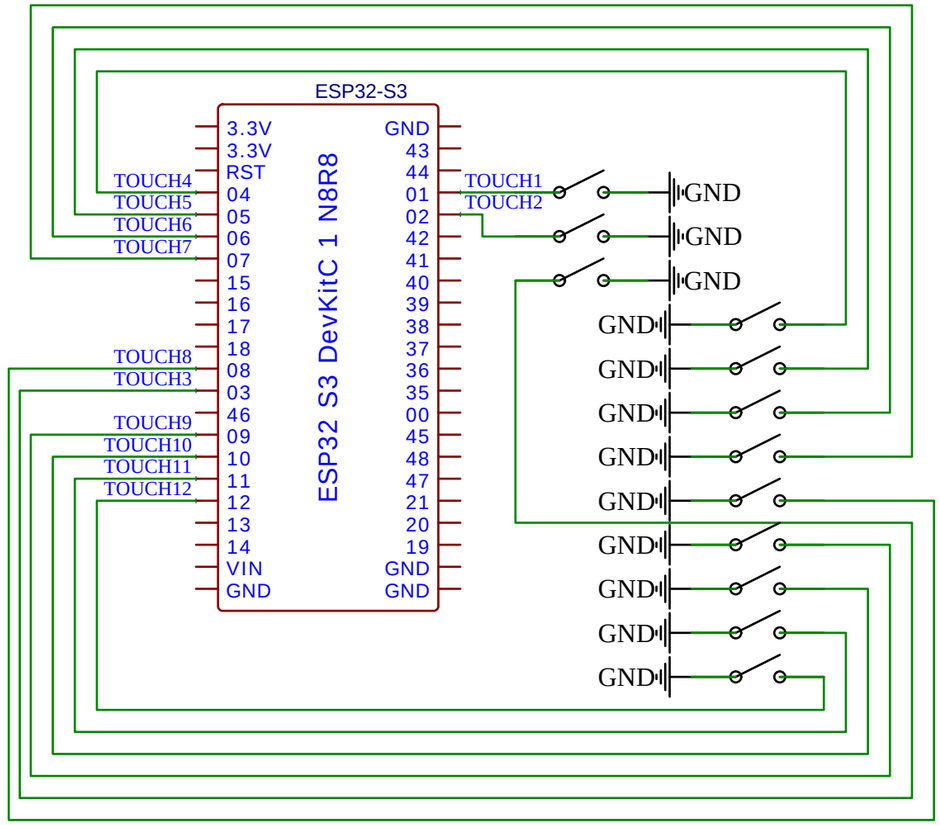

TITLE: GROUP16 BOARD LAYOUT		REV: 1.0
EasyEDA	Company: KASETSART UNIVERSITY	Sheet: 1/1
	Date: 2025-03-10 Drawn By: GROUP16	