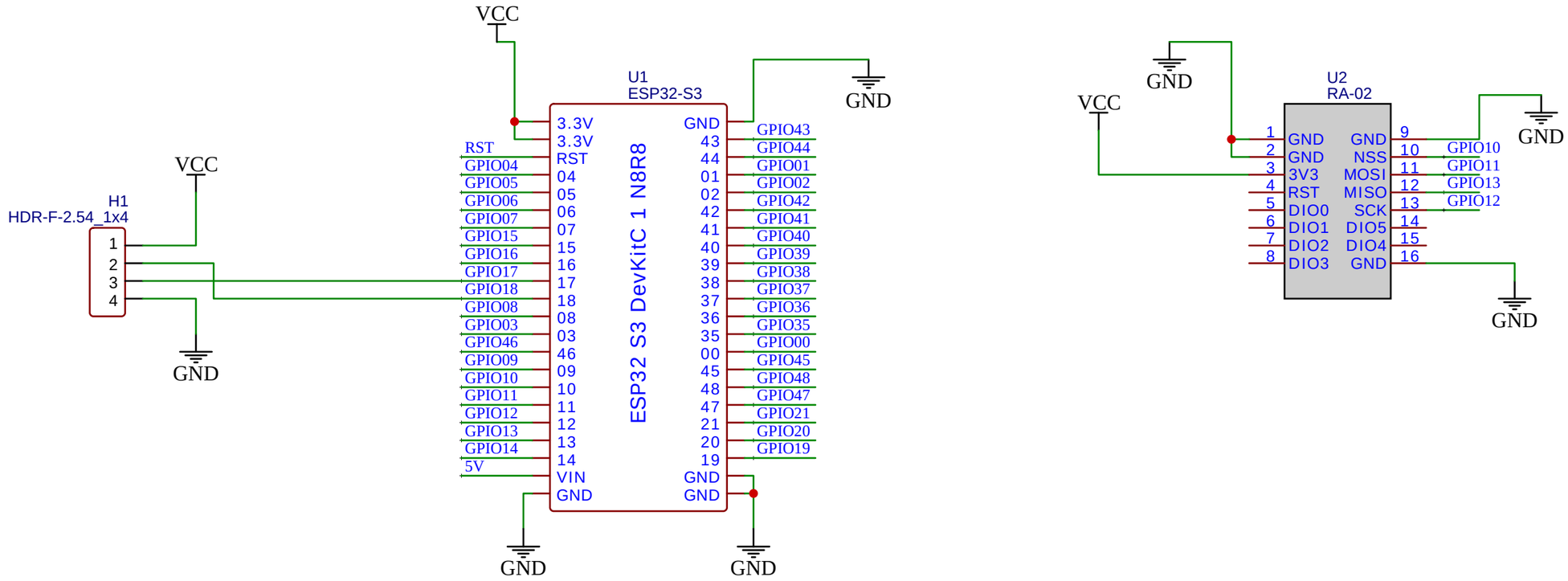

TITLE: KUBUS			REV: 1.0
EasyEDA	Company: KUBUS		Sheet: 1/1
	Date: 2025-02-10	Drawn By: Pratchayanon	