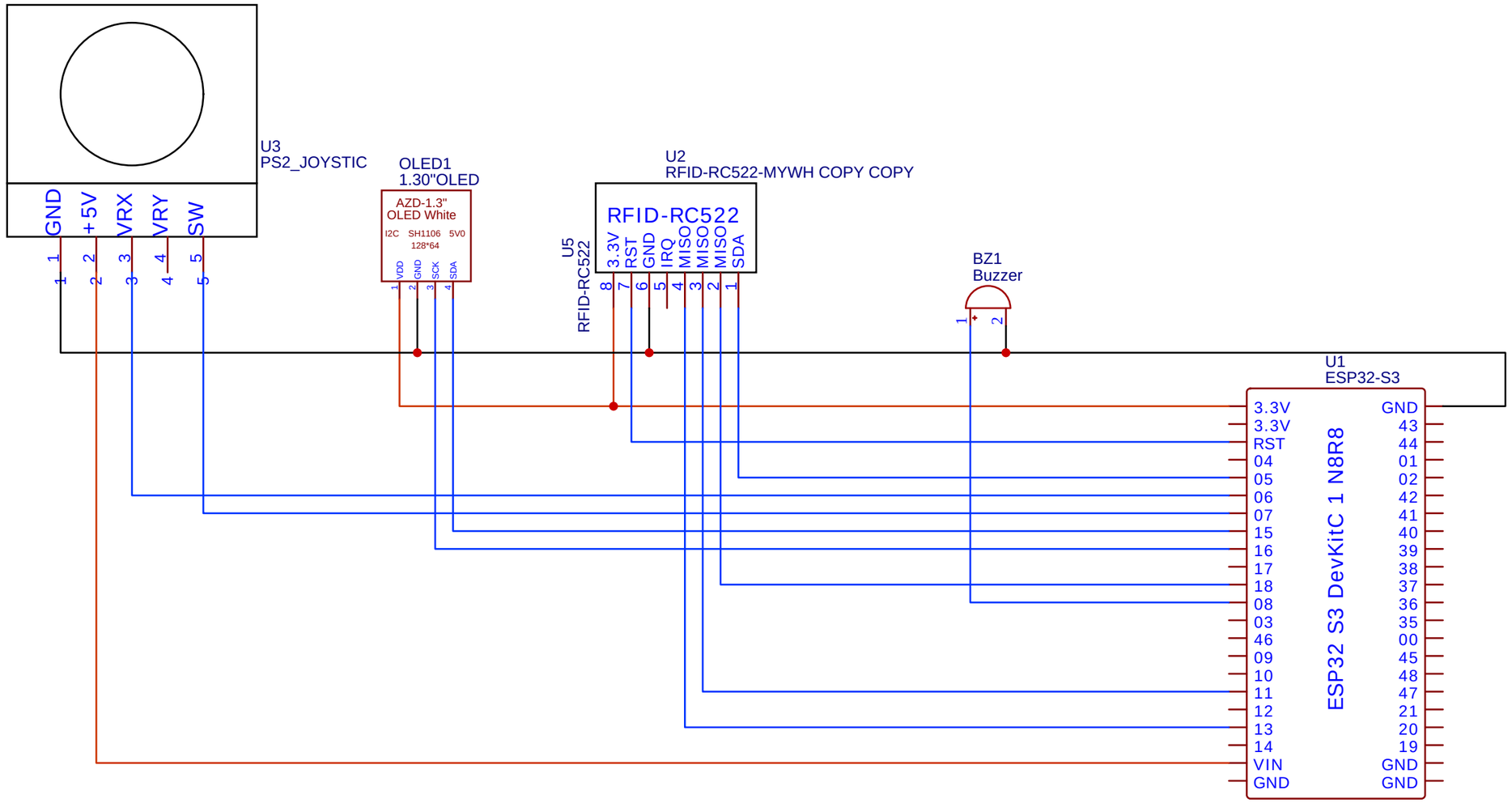

TITLE: ESP32-2 protector		REV: 1.0
EasyEDA	Company: Your Company	Sheet: 1/1
	Date: 2025-03-12 Drawn By: khajonvit.p	

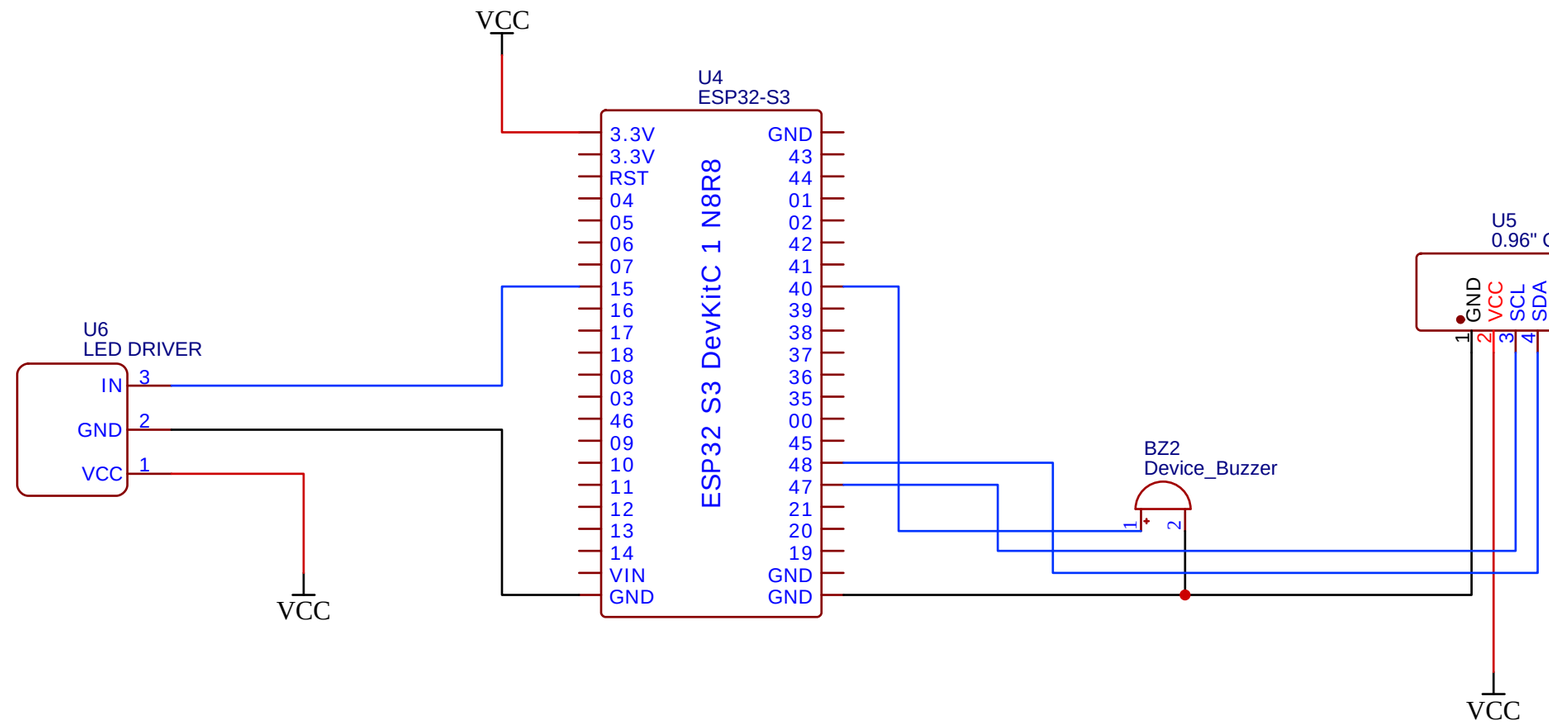

TITLE: ESP32-1 detector		REV: 1.0
EasyEDA	Company: Your Company	Sheet: 1/1
	Date: 2025-03-12 Drawn By: khajonvit.p	