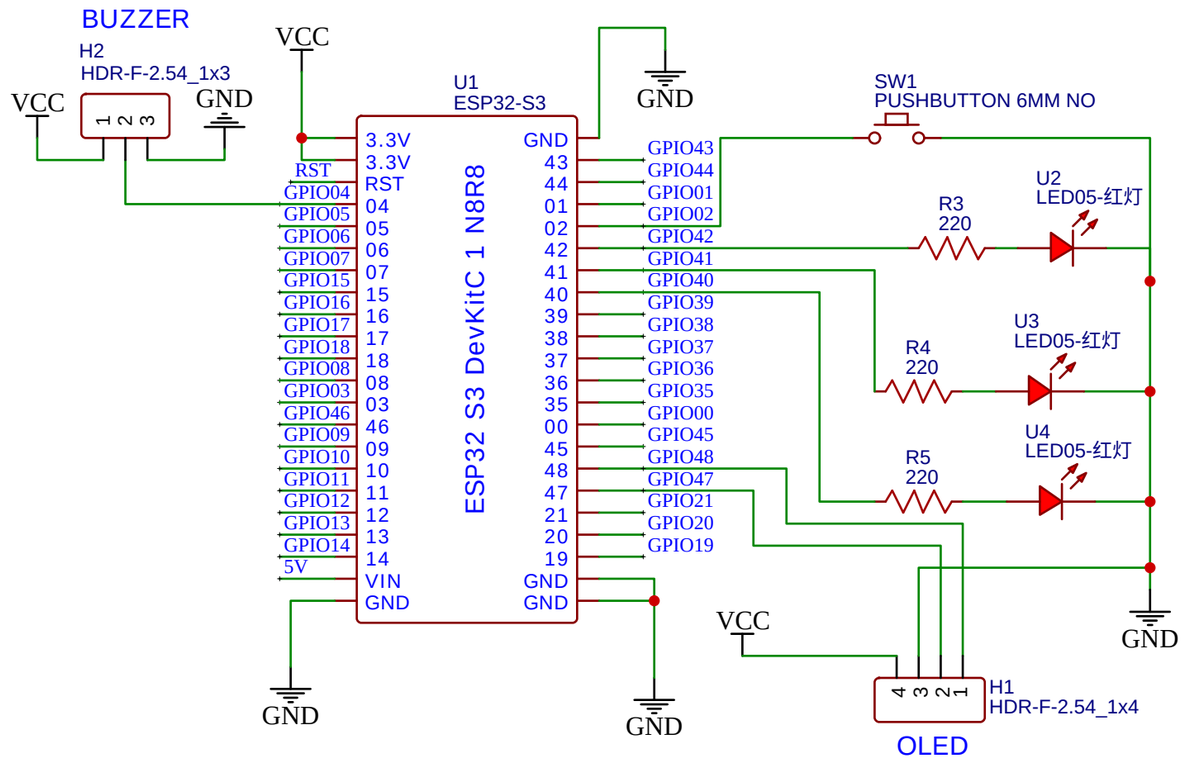

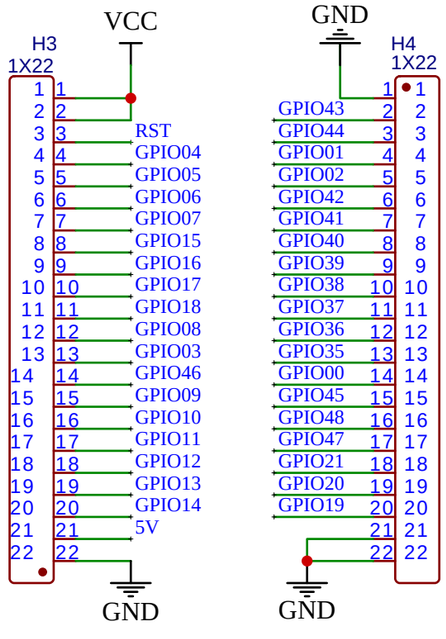

TITLE: RESIVER (BORAD 2)		REV: 1.0
EasyEDA	Company: Mai Kriat	Sheet: 1/2
	Date: 2025-3-13 Drawn By: puriwat.p	

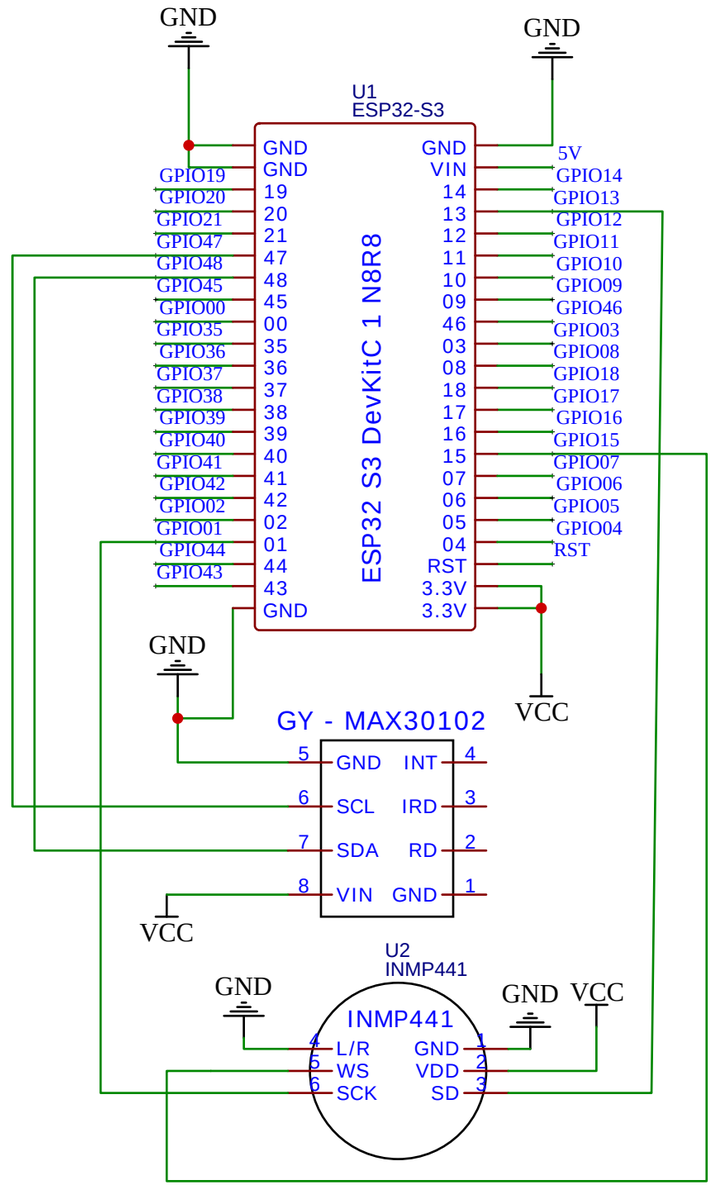

TITLE: SENDER (BORAD 1)		REV: 1.0
EasyEDA	Company: Mai Kriat	Sheet: 2/2
	Date: 2025-3-13 Drawn By: puriwat.p	