ESP32 + MLT-8530

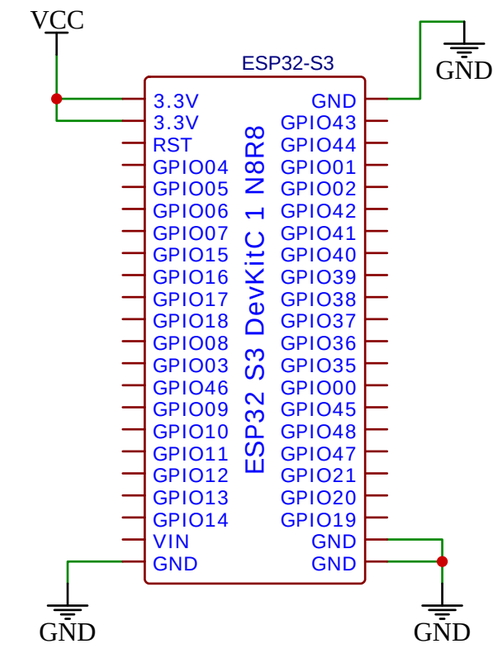

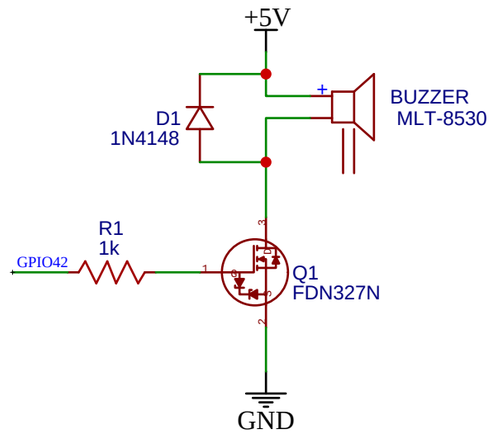

ESP32 + INMP441

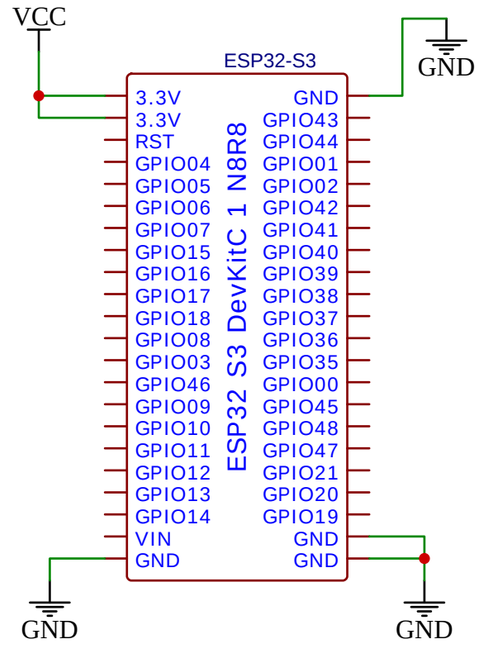

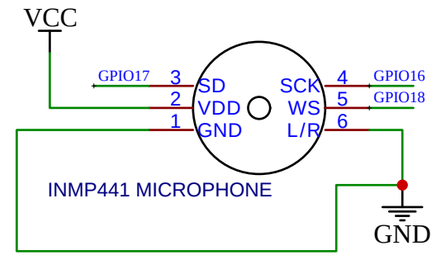

TITLE: GROUP2 BOARD LAYOUT		REV: 1.0
EasyEDA	Company: KASETSART UNIVERSITY	Sheet: 1/1
	Date: 2025-03-10 Drawn By: GROUP2	